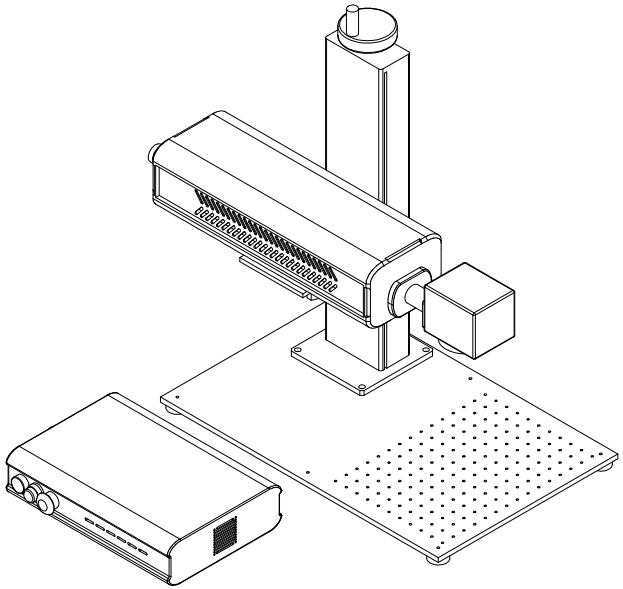

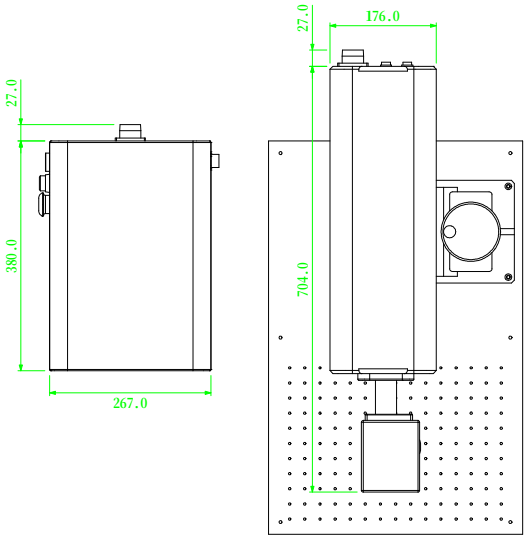
27.0
176.0
27.0
380.0
704.0
267.0

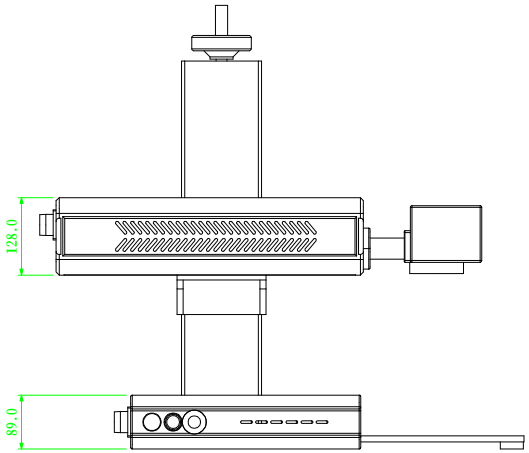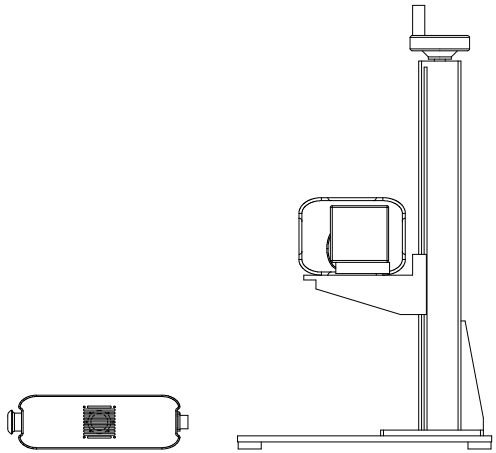
128.0
89.0