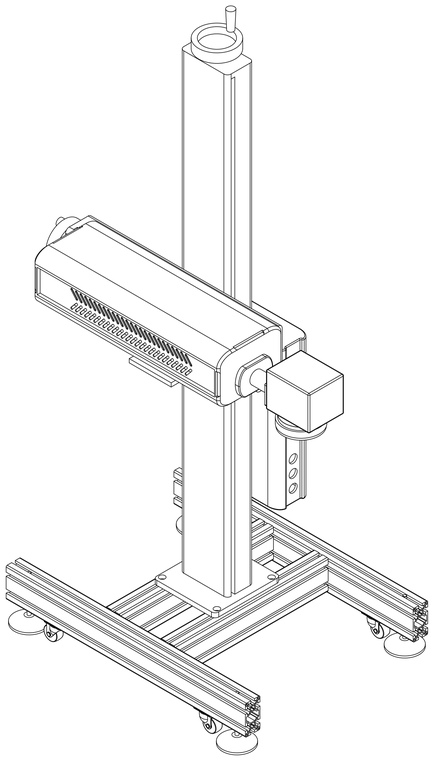

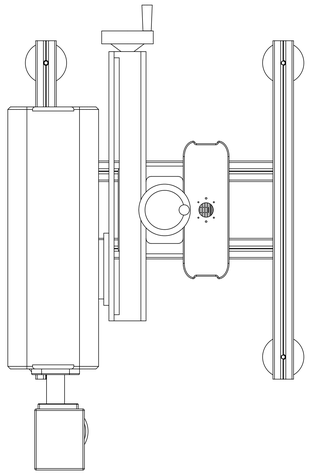

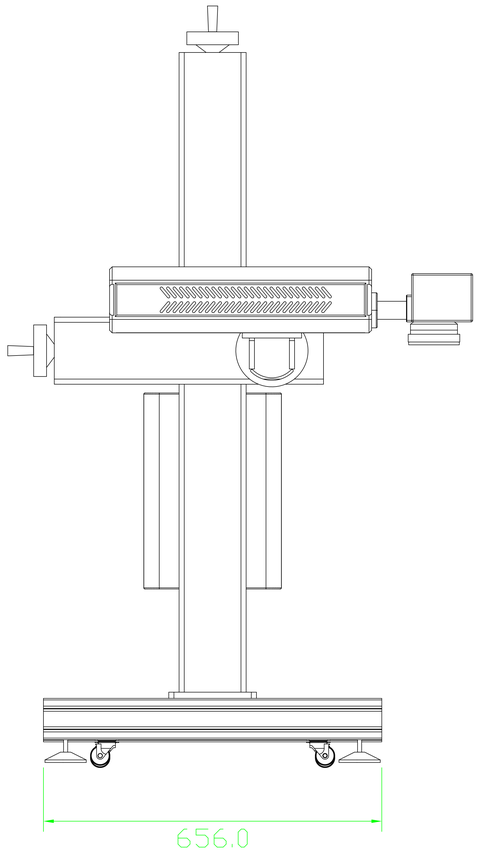
656.0

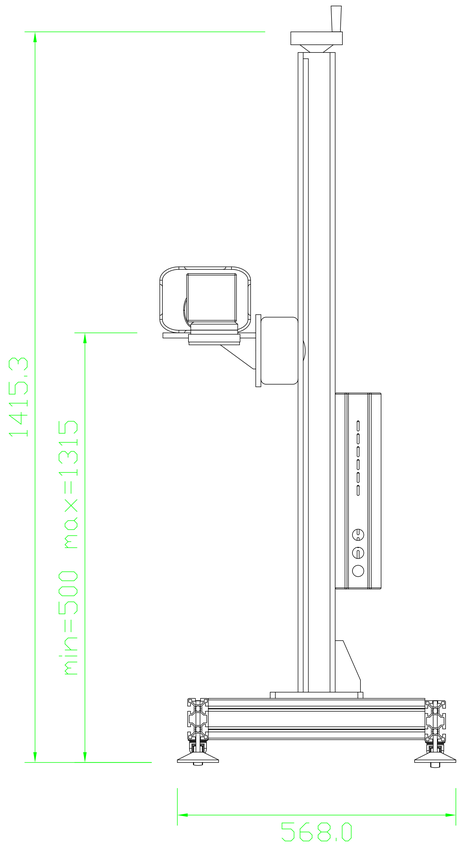
1415.3
min=500 max=1315
568.0